DELANEY®

Specifications

Door Prep	Cross bore: 2-1/8" Edge bore: 1" Latch face: 1" x 2-1/4"	**Latches** *(6-Way Available)*	Entrance: 2-3/8" and 2-3/4" 6-way adjustable (9045R) Passage/Privacy: 2-3/8" and 2-3/4" 6-way adjustable (9074) Faceplate: 1" x 2-1/4" round corner Bolt: 1/2" throw
Backset	Fits 2-3/8" and 2-3/4"	**Strikes**	1-3/4" x 2-1/4" full lip round corner (9103)
Door Thickness	1-3/8" ~ 1-3/4" door standard	**Wood Screws**	Combination screws that suit both wood or metal door mounting
Cylinder	KW1 5-pin **standard** SC1 5-Pin optional. Entries packed KA5	**Door Handing**	Reversible Lever Handing required for dummy function and Handleset interior

DAYTON

Shown in Satin Nickel

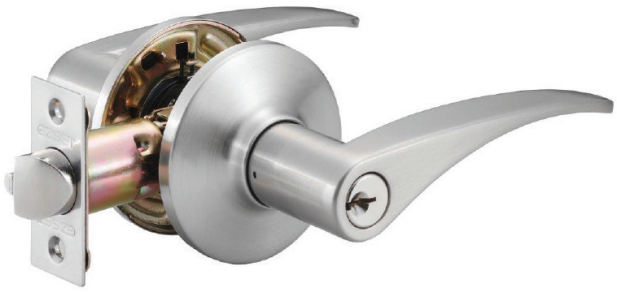

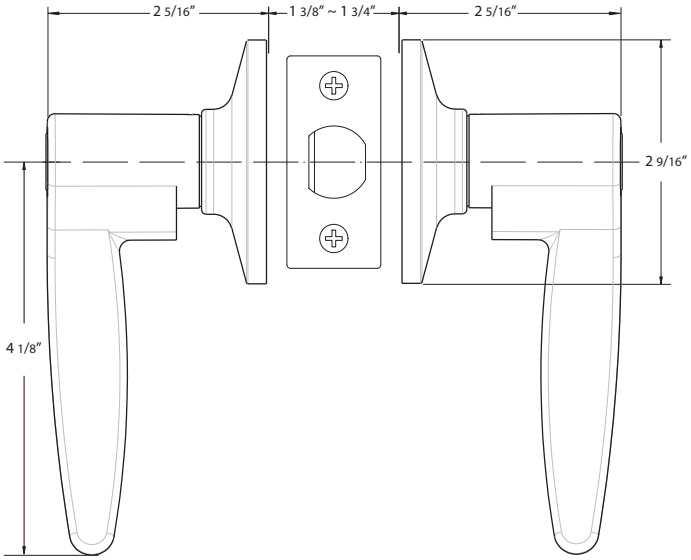

BOX PACK

Model	Function	WT/CTN	CTN QTY		US15 Satin Nickel	US26 Polished Chrome	US19 Black
500T - DT	Push Button Entrance (Panic Proof)	26 lb	20 Pcs	Item No.	D20720P	D20726P	D20729P
501T - DT	Passage	23 lb	20 Pcs	Item No.	D24720	D24726	D24729
502T - DT	Push Button Privacy (Panic Proof)	24 lb	20 Pcs	Item No.	D22720P	D22726P	D22729P
515 - DT	Dummy	15 lb	20 Pcs	Item No.	D25720 (L/R)	D25726 (L/R)	D25729 (L/R)